MKF 511 TS

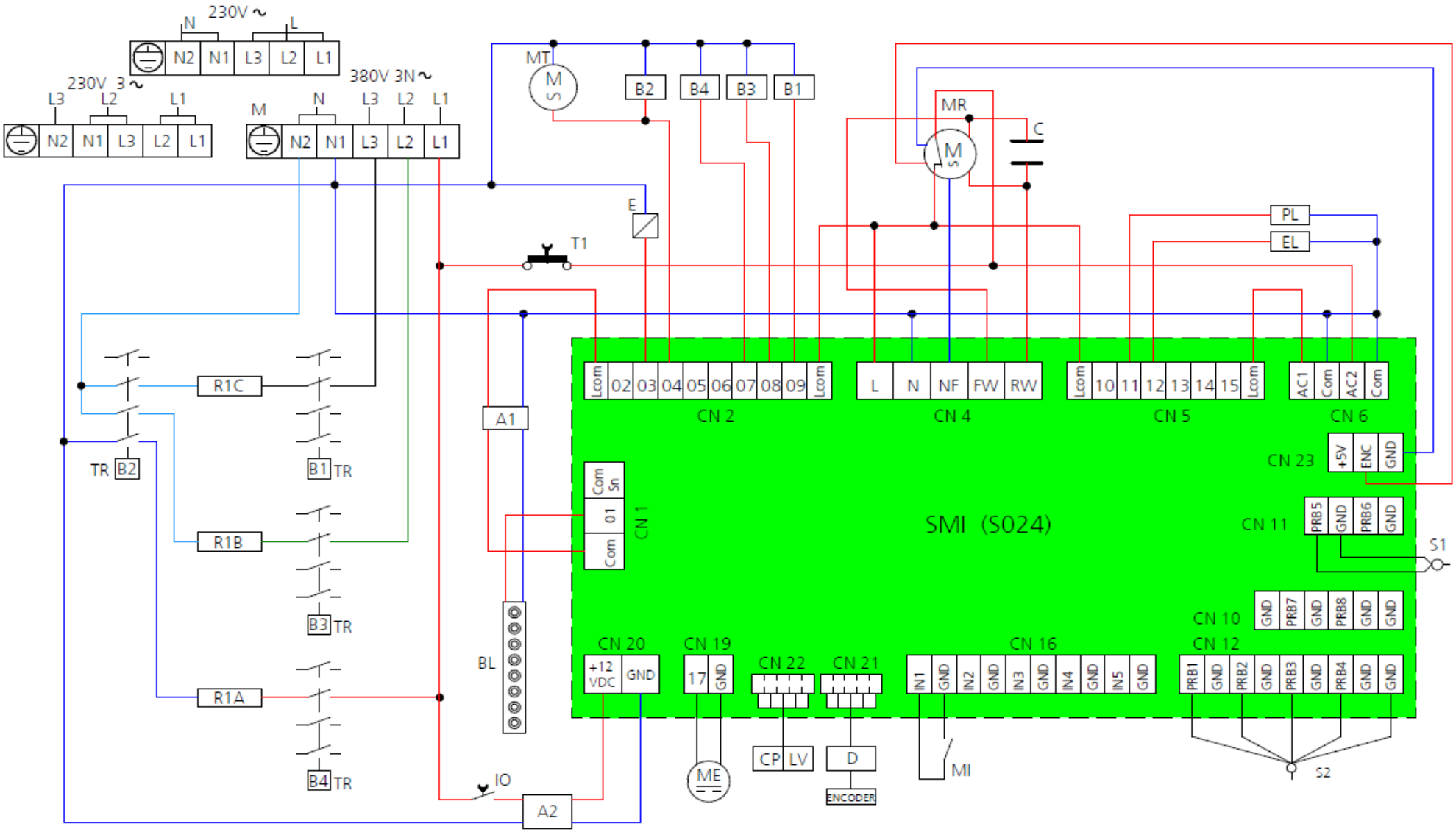
230V ~
N
L
N2 N1 L3 L2 L1
230V 3 ~
L3 L2 L1
380V 3N ~
M N L3 L2 L1
MT
B2 B4 B3 B1
MR
C
E
T1
PL
EL
R1C
R1B
R1A
TR B2
B1 TR
B3 TR
B4 TR
A1
A2
BL
IO
Lcom 02 03 04 05 06 07 08 09 Lcom
CN 2
L N NF FW RW
CN 4
Lcom 10 11 12 13 14 15 Lcom
CN 5
AC1 Com AC2 Com
CN 6
CN 23
+5V ENC GND
Com Sn
01
Com
CN 1
SMI (S024)
CN 11
PRB5 GND PRB6 GND
S1
CN 10
GND PRB7 GND PRB8 GND GND
CN 20
+12 VDC GND
CN 19
17 GND
CN 22
CN 21
CN 16
IN1 GND IN2 GND IN3 GND IN4 GND IN5 GND
CN 12
PRB1 GND PRB2 GND PRB3 GND PRB4 GND GND
ME
CP LV
D
ENCODER
MI
S2

MKF 511 TS

	WIRING LAYOUTS	SCHEMA ELETTRICO	SCHÉMAS ÉLECTRIQUES	ESQUEMAS ELÉCTRICOS	SCHALTPLÄNE	[illegible]
M	POWER SUPPLY TERMINAL BOARD	MORSETTIERA ALIMENTAZIONE	BORNIER ALIMENTATION	CAJA DE CONEXIONES DE ALIMENTACIÓN	VERSORGUNGSKLEMMLEISTE	[illegible]
B	CONTACTOR COIL	BOBINE TELERUTTORI	BOBINE TÉLÉRUPTEUR	BOBINAS TELERUPTORES	SCHÜTZSPULEN	[illegible]
TR	CONTATOR	TELERUTTORI	TÉLÉRUPTEUR	TELERUPTORES	SCHÜTZS	[illegible]
R1	CIRCULAR HEATING ELEMENT	RESISTENZA CIRCOLARE	RECISTENCE CIRCULAIRE	RESISTENCIA CIRCULAR	KREIS HEIZELEMENT	[illegible]
C	CAPACITOR	CONDENSATORE	CONDENSATEUR	CONDENSADOR	KONDENSATOR	[illegible]
MR	RADIAL MOTORISED VENTILATOR	MOTOVENTILATORE RADIALE	MOTOVENTILATEUR RADIAUX	MOTOVENTILADOR RADIAL	RADIAL MOTORLÜFTER	[illegible]
MT	TANGENTIAL MOTORISED VENTILATOR	MOTOVENTILATORE TANGENZIALE	MOTOVENTILATEUR TANGENTIEL	MOTOVENTILADOR TANGENCIAL	TANGENZIALER MOTORLÜFTER	[illegible]
EL	WASHING SOLENOID VALVE	ELETTROVALVOLA LAVAGGIO	ELECTROVANNE DE LAVAGE	VÁLVULA SOLENOIDE DE LAVADO	WASCHEN MAGNETVENTIL	[illegible]
PL	WASHING PUMP	POMPA LAVAGGIO	POMPE DE LAVAGE	BOMBA DE LAVADO	WASCHPUMPE	[illegible]
MI	DOOR MICROSWITCH	MICROINTERRUTTORE PORTA	MICRO-INTERRUPTEUR PORTE	MICROINTERRUPTOR PUERTA	MIKROSWITCH TÜR	[illegible]
ME	DRYER MOTOR	MOTORE ESSICATORE	MOTEUR SÉCHEUSE	MOTOR SECADOR	TROCKNER	[illegible]
D	DISPLAY BOARD	SCHEDA DISPLAY	PLATINE DISPLAY	TARJETA DEL DISPLAY	DISLAY PLATINE	[illegible]
SMI	MICROPOWER BOARD	SCHEDA MICROPOTENZA	PLATINE MICROPUISSANCE	TARJETA MICROPOTENCIA	MICROPOWER PLATINE	[illegible]
A1	LED BAR POWER SUPPLY	ALIMENTATORE BARRA LED	ALIMENTATION BARRE LED	ALIMENTACION BARRA DE LUCES LED	STROMVERSORGUNG LED LEISTE	[illegible]
BL	LED BAR	BARRA LED	BARRE LED	BARRA DE LUCES LED	LED LEISTE	[illegible]
A2	POWER SUPPLY BOARDS	ALIMENTATORE SCHEDE	ALIMENTATION PLATINE	ALIMENTACION TARJETAS	KARTENZUFUHR	[illegible]
T1	OVEN SAFETY THERMOSTAT	TERMOSTATO DI SICUREZZA FORNO	THERMOSTAT DE SÉCURITÉ FOUR	TERMOSTATO DE SEGURIDAD HORNO	SICHERHEITSTHERMOSTAT	[illegible]
E	WATER SOLENOID-VALVE	ELETTROVALVOLA ACQUA	ELECTROVANNE EAU	ELECTROVÁLVULA AGUA	WASSER MAGNETVENTIL	[illegible]
LV	CONNECTION TO PROOFER	COLLEGAMENTO LIEVITATORE	CONNEXION CHAMBRE LEVAGE	CONEXION A LA FERMENTADORA	GARSCHRANK VERBINDUNG	[illegible]
CP	CONNECTION TO HOOD	COLLEGAMENTO CAPPA	CONNEXION HOTTE	CONEXION A LA CAMPANA	HAUBE VERBINDUNG	[illegible]
S1	COOKING CHAMBER PROBE	SONDA CAMERA COTTURA	SONDE CHAMBRE CUISSON	SONDA DE LA CAMARA DE COCCION	KOCHKAMMER-FUEHLER	[illegible]
S2	HEART PROBE	SONDA AL "CUORE"	SONDE AU COUER	SONDA AL CORAZON	KERNFUEHLER	[illegible]